Z-3461

Petrol Engine Locking Kit 1.8

This specially assembled kit is designed for the popular 1.8 petrol engines found in some of the most popular Fiat cars. (1996 - 2003)

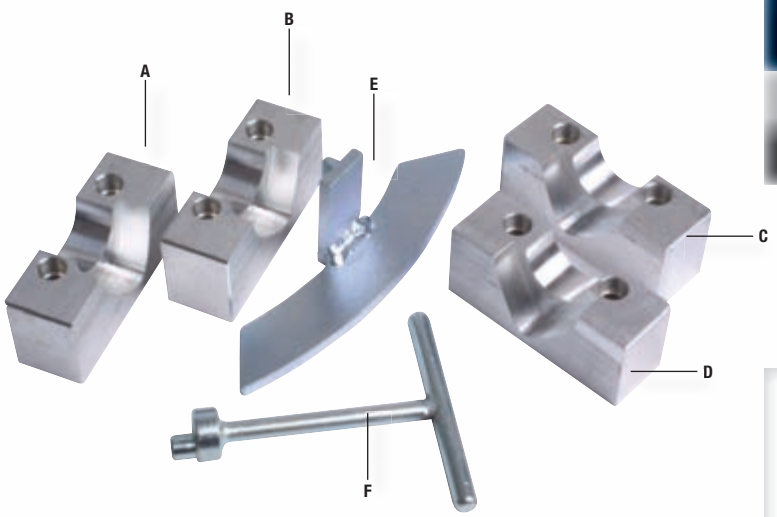

The CNC machined alloy blocks used to lock Fiat camshafts are engine specific and for this reason it is imperative that the correct blocks are used.
Please ensure you check you engine number matches exactly that given in our applications.

Applications

Barchetta | Brava | Bravo | Coupe | Marea | Marea Weekend
Marengo | Punto | Punto Classic
engine code 182A2.000 | 183A1.000

For full vehicle application and other tools required go to: www.lasertools.co.uk/toolpoint

For PETROL BELT DRIVEN

Component Codes

*Available Separately

ID	Code	OEM Ref	Description
A	C137	1 860 847 000	Inlet Camshaft Locking Tool (E1)
B	C137	1 860 847 000	Exhaust Camshaft Locking Tool (E2)
C	C136	1 860 875 000	Inlet Camshaft Locking Tool (D1)
D	C136	1 860 875 000	Exhaust Camshaft Locking Tool (D2)
E	C148	1 860 898 000	Flywheel Locking Tool
F	C186		Tensioning Tools (Part No. 3826)*

Z-3470

Petrol Engine Locking Kit 1.4

The 3470 kit has been specially made to suit the popular 1.4 petrol engines found across the Fiat range. Be sure to match your engine code to those listed. The CNC machined alloy blocks should only be used on these engines. (1994 - 2000).

Laser Tools have chosen to offer them separately as the crank timing tools to try and help reduce our customers costs. Many of the Fiat engines use the same crank locking tools but different camshaft locking blocks. If you have our master kit you only have to add these 2 blocks to cover these engines.

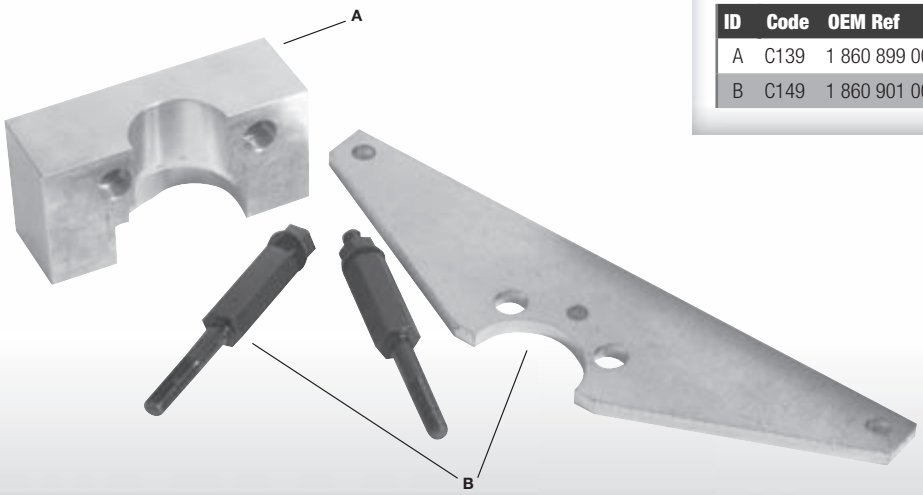

Applications

Brava | Bravo | Marea | Marea Weekend | Marengo
engine code 182A3.000 | 182A5.000 (1994 - 2000)

For full vehicle application and other tools required go to: www.lasertools.co.uk/toolpoint

For PETROL BELT DRIVEN

Component Codes

ID	Code	OEM Ref	Description
A	C139	1 860 899 000	Camshaft Locking Tools (G)
B	C149	1 860 901 000	Crankshaft Timing Tools c/w Pins (2)