Z-1866

Diesel Timing Kit

A timing tool set of essential tools for setting and locking the camshaft and crankshaft when changing the timing belt on earlier Ford 1.6 | 1.8 and 2.5 litre diesel engines.

The kit also forms a part of the Laser Engine Timing & Locking Kit 2246 and the comprehensive Laser Diesel Engine and Fuel Pump Timing & Locking Kit 2688.

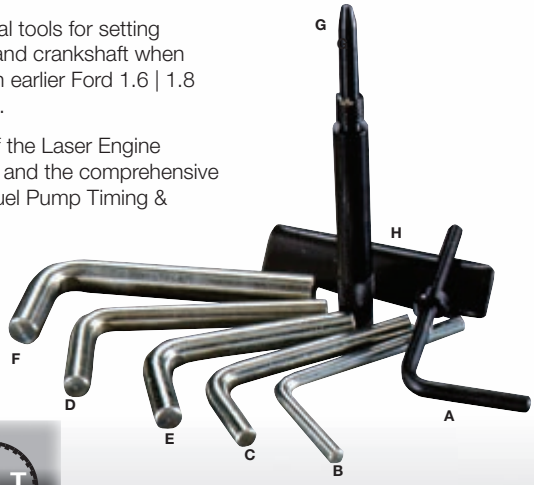

For DIESEL BELT DRIVEN

Applications

1.6 Fiesta I Escort I Orion (1984 - 1989)
1.8 Fiesta I Escort I Orion (1984 - 1989)
1.8 Sierra I P100 (1989 - 1993)
1.8 Courier (1989 - 1996) I 2.5 Transit (1983 - 2000)

For full vehicle application and other tools required go to: www.lasertools.co.uk/toolpoint

Component Codes

ID	Code	OEM Ref	Description
A	C050	23-019	6mm Setting Pin and Washer
B	C051	0178B	6mm Setting Pin
C	C052	0153-M/0178/C/D	8mm Setting Pin
D	C053	21-123/KM6011	9.5mm Setting Pin
E	C054	0178-A	10mm Setting Pin
F	C055	23-020	12.7mm Setting Pin
G	C060	21-104	Setting Screw
H	C070	21-105/U40021 MP1-300/2065A	Setting Bracket

Z-1868

Galaxy Timing Tools TDi

Simple but effective engine timing tools for the TDi engined Ford Galaxy.

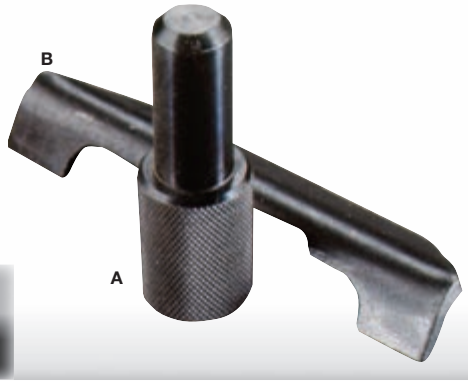

For DIESEL BELT DRIVEN

Applications

1.9 TDi Galaxy (1995 - 2000)

For full vehicle application and other tools required go to: www.lasertools.co.uk/toolpoint

Component Codes

ID	Code	OEM Ref	Description
A	C061	23-047/2064	Setting Spigot
B	C188	21-105/2065A	Setting Bracket

Z-4145

Diesel Engine Timing Kit 1.4 | 1.6 TDCi

The 4145 kit contains the essential pins required for setting the cam belt timing on the Ford 1.4 | 1.6 TDCi engines.

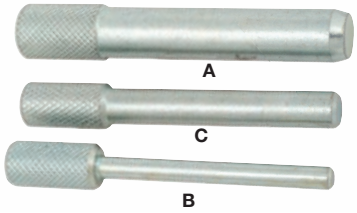

For DIESEL BELT DRIVEN

Applications

1.4 I 1.6 TDCi C-Max I Fiesta I Focus I Fusion (2002 - 2010)

For full vehicle application and other tools required go to: www.lasertools.co.uk/toolpoint

Component Codes

ID	Code	OEM Ref	Description
A	C057	303-734/21-262	Flywheel Locking Pin
B	C089	303-732/21-260	Camshaft/Fuel Pump Alignment Tool
C	C101	303-735/21-263	Camshaft Sprocket Locking Tool

Z-4306

For DIESEL CHAIN DRIVEN

Engine Locking Pin Diesel

Crankshaft locking pin to allow the removal of the timing chain on Mondeo 2.2 (04-07), Transit 2.2 | 2.4 | 3.2 (03-10) TDCi diesel engines. The use of a crankshaft holding tool when loosening and tightening the crank pulley.

Applications

Mondeo 2.2 (2004 - 2007) I Transit 2.2 I 2.4 I 3.2 (2003 - 2010)

Component Codes

Code	OEM Ref	Description
C342	303-698/21-251	Flywheel Locking Tool